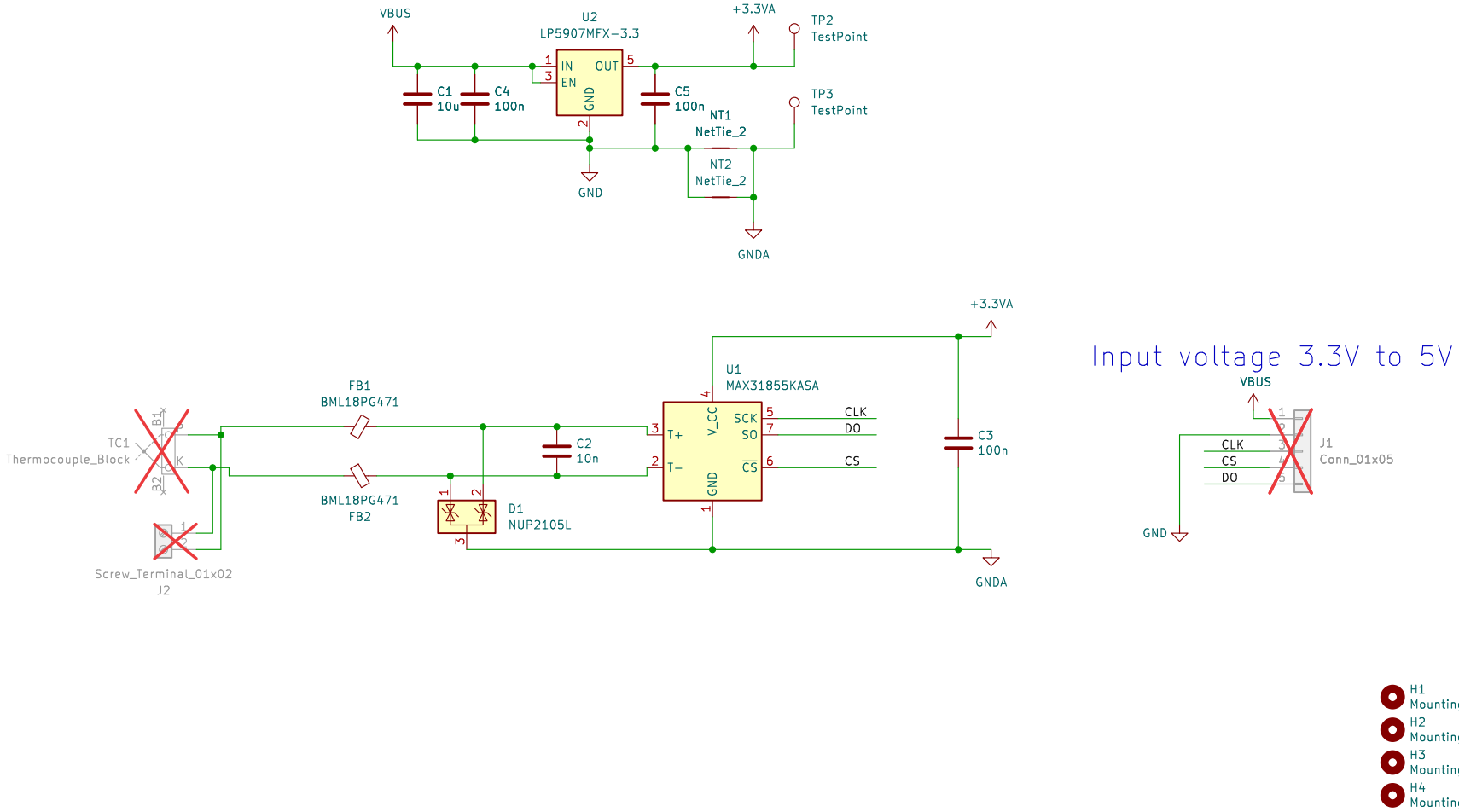


FR0428-01-01
**FRIENTECH INC.**

Sheet: /
File: temp1ch.kicad_sch

***Title: 1CH K THERMOMETER KIT***

| | | |
|---|---|---|
| Size: A4 | Date: 2025-06-05 | **Rev: REV01** |
| KiCad E.D.A. kicad 7.0.5 | | Id: 1/1 |